BLUESTAR

Parts Manual

Gas Rangetop Models

BSPRT244B

April 2021

Table of Contents

Page	Description
1-2	Cooktop Assembly BSPRT244B
3-4	Burner Box Assembly BSPRT244B
5-6	Top Rail Assembly BSPRT244B
7-8	Grease Pan Assembly BSPRT244B
9-10	Front 18K 22K Burner Assembly
11-12	Front 25K Burner Assembly
13-14	Rear 18K 22K Burner Assembly
15-16	Rear Simmer Burner Assembly
17	Orifice Chart

GUARANTEEDPARTS.COM
CUSTOMER SATISFACTION GUARANTEED

Cooktop Assembly BSPRT244B

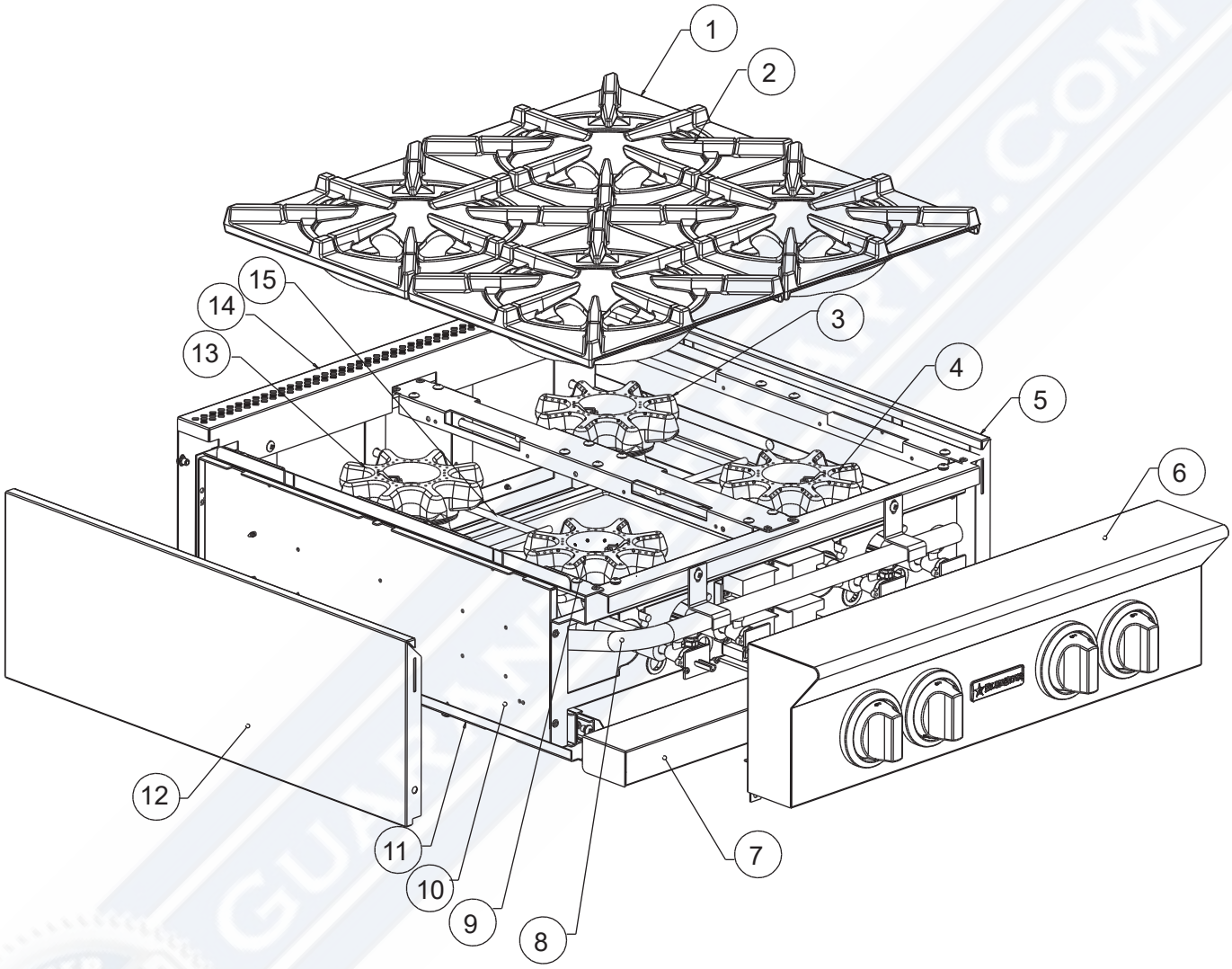

Cooktop Assembly BSPRT244B

Reference Number	Part Number	Part Name	Quantity
1	700801	GRATE-TOP, MATTE BLACK	4
2	700901	GRATE-RING, MATTE BLACK	4
3	600087	SA REAR 18K 22K BURNER	1
4	600086	SA FRONT 18K 22K BURNER	1
5	113221	BODY SIDE RANGE TOP RGT24	1
6	600355	SA PLAT PLATE RNG TOP RAIL 24	1
7	600370	SA GREASE PAN ASSY 24 BSP	1
8	600275	SA MANIFOLD PLAT RANGETOP 24	1
9	600030	FRONT 25K BURNER SA	1
10	600335	SA COMMON TOP SECTION 24	1
11	101345	BURNER BOX PATCH 1	1
12	113222	BODY SIDE RANGE TOP LEFT 24	1
13	600083	SA REAR SIMMER BURNER	1
14	118400	BACKGUARD GRATE HGT V2 24	1
15	704504	S/S BURNER SUPPORT	2

GUARANTEEDPARTS.COM
CUSTOMER SATISFACTION GUARANTEED

Burner Box Assembly BSPRT244B

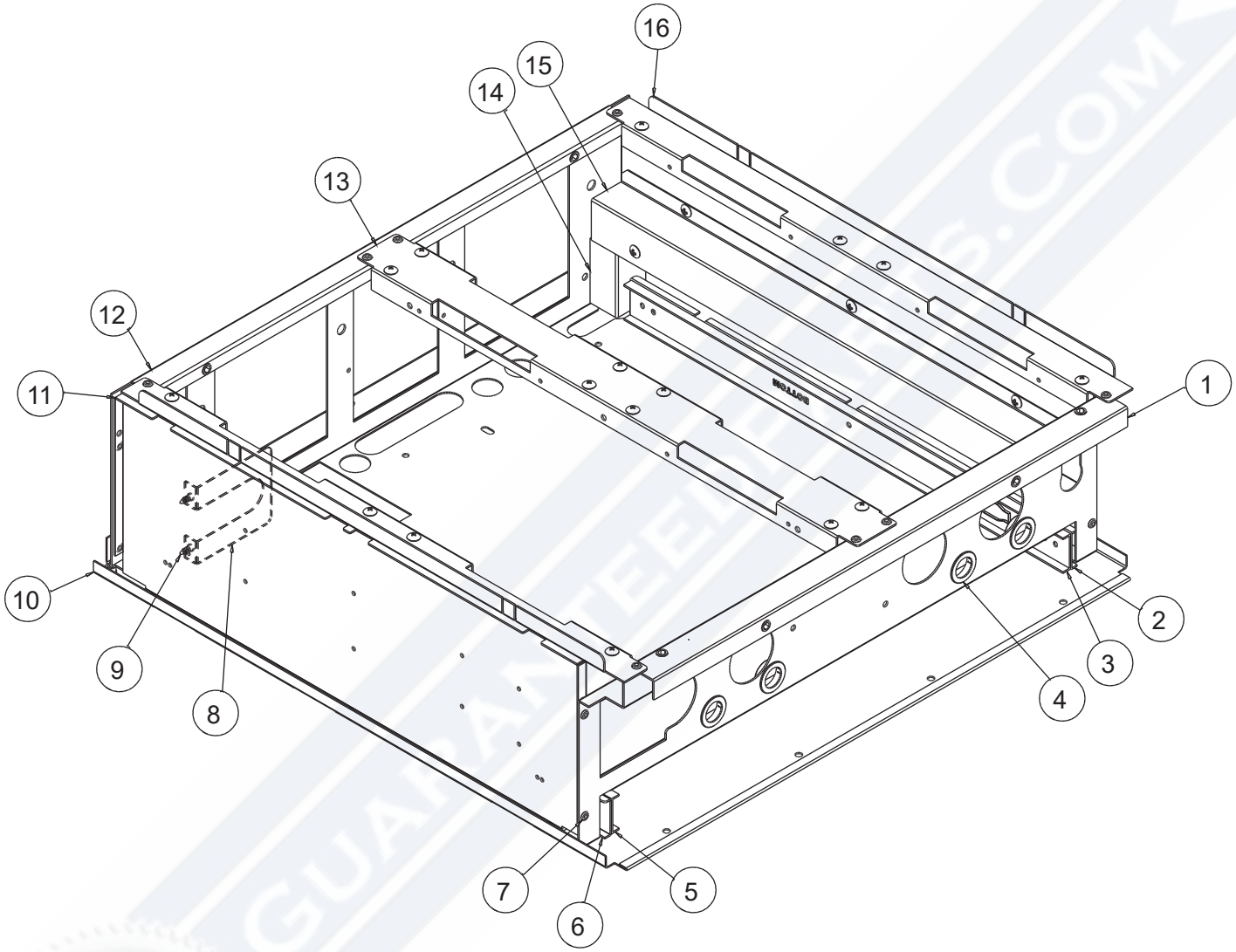

Burner Box Assembly BSPRT244B

Reference Number	Part Number	Part Name	Quantity
1	100230	BURNER BOX FRONT 24 BSP	1
2	101650	DRIP TRAY BRACKET	2
3	747803	Slide, Bottom Section	2
4	741201	1" SNAP BUSHING	4
5	747803	Slide, Bottom Section	2
6	101650	DRIP TRAY BRACKET	2
7	306301	RIVET, 3/16" COUNTERSINK BLIND	19
8	113110	MANIFOLD SUPPORT	1
9	303201	SCR. #10 X 1/2" PH TRUSS HD ZP	16
10	101330	Burner Box Bottom 24	1
11	101507	BURNER BOX INSUL PANEL BSP	2
12	100220	Burner Box Back 24	1
13	101215	Top Support Center OB	1
14	101381	WIRE WAY, BOTTOM	1
15	101382	WIRE WAY, TOP	1
16	101217	Top Support Side OB	1

GUARANTEED PARTS CO.
CUSTOMER SATISFACTION GUARANTEED

Top Rail Assembly BSPRT244B

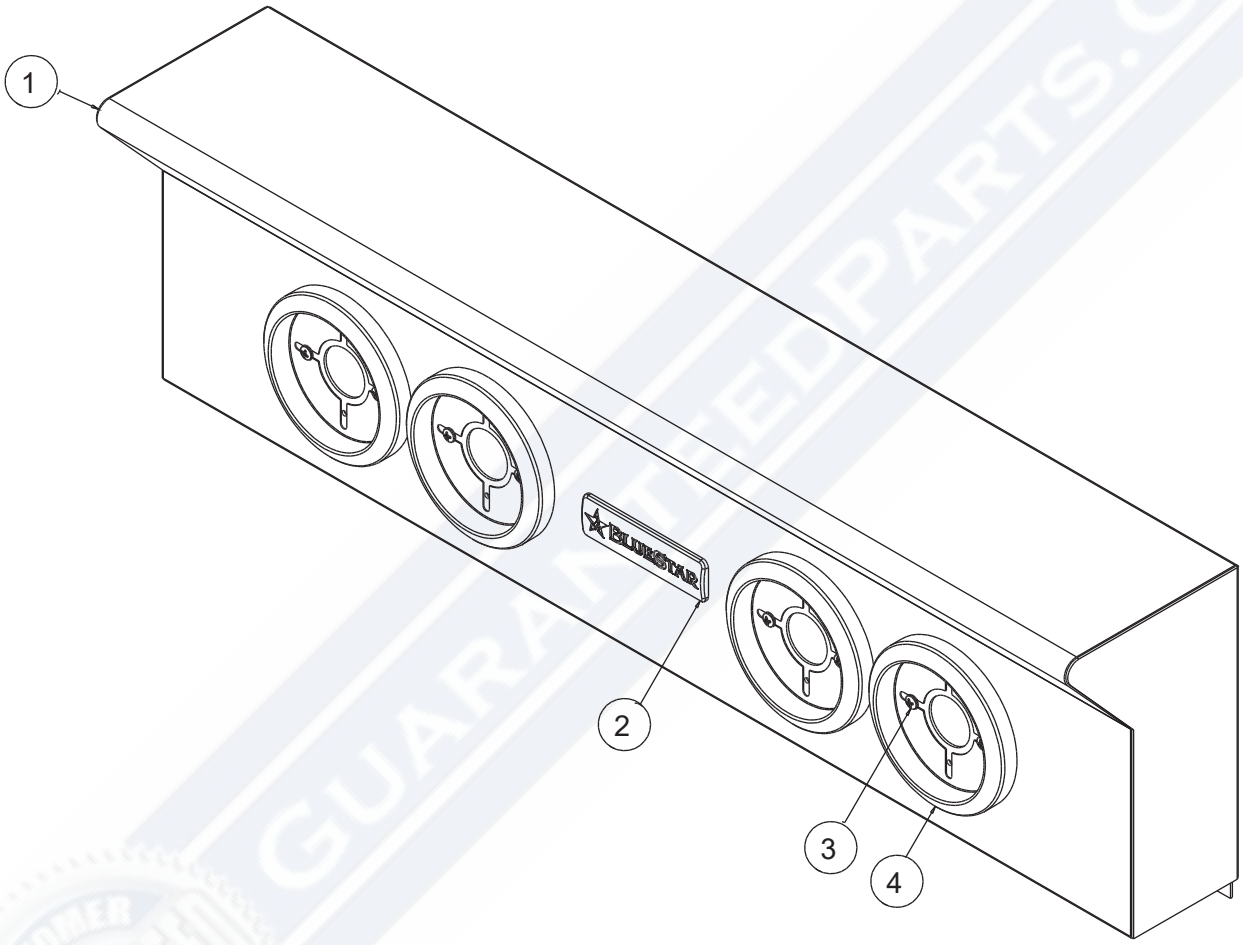

Top Rail Assembly BSPRT244B

Reference Number	Part Number	Part Name	Quantity
1	502716	WA PLATE RAIL RANGETOP 24	1
2	742410	BS BADGE - SMALL	1
3	305201	SCREW 6-32 x PAN HEAD	8
4	732101	LARGE BEZEL	4
N/S	304001	Push Nut Black Logo Clip	2

GUARANTEEDPARTS.COM
CUSTOMER GUARANTEED SATISFACTION

Grease Pan Assembly BSPRT244B

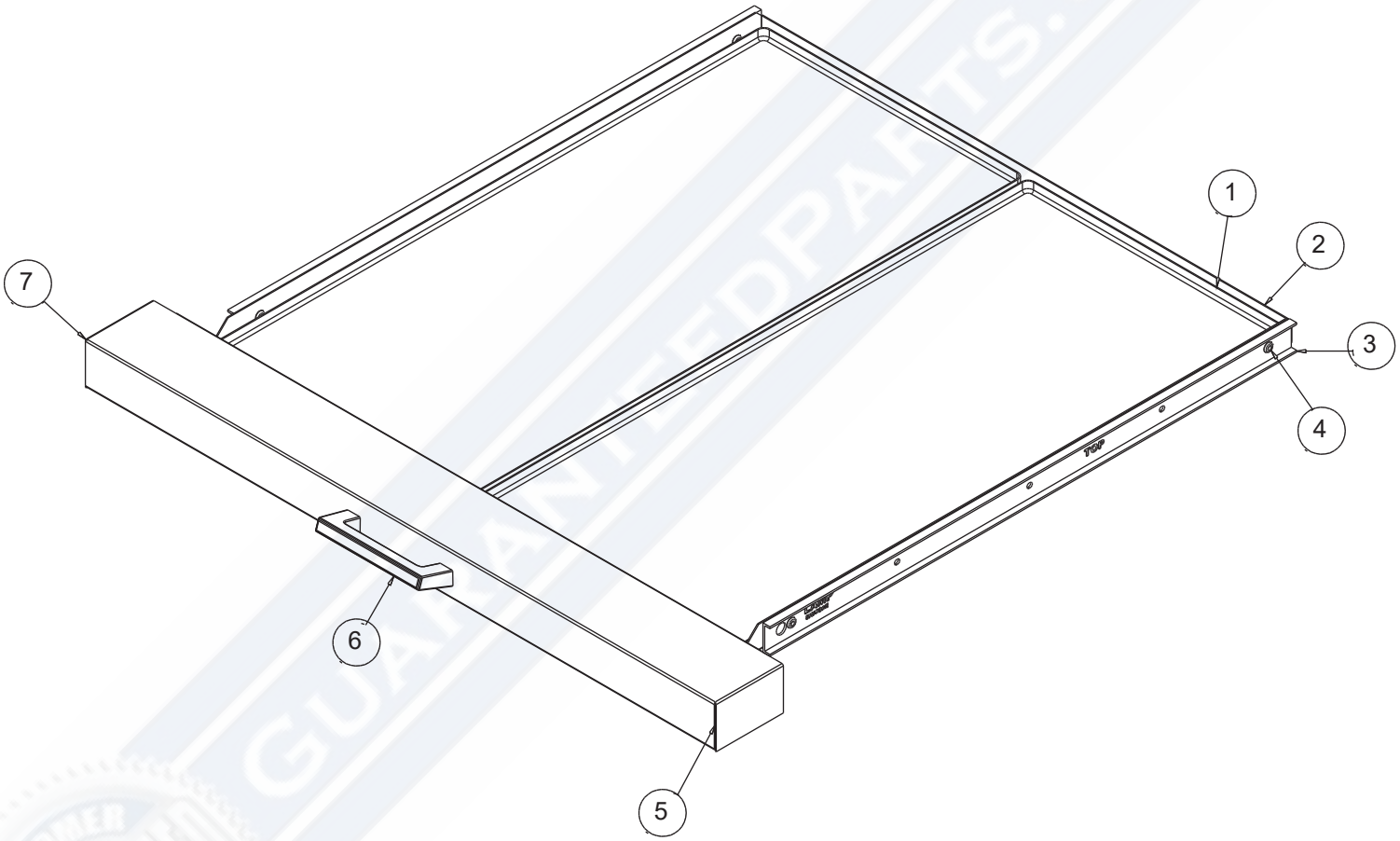

Grease Pan Assembly BSPRT244B

Reference Number	Part Number	Part Name	Quantity
1	303201	SCREW #10x1/2 PH TRUSS ZP	8
2	704505	GREASE PAN INSERT	2
3	747803	Slide, Top Section	2
4	306301	RIVET, 3/16" COUNTERSINK BLIND	4
5	101690	GREASE PAN HNDL DIVERTER BSP24	1
6	703006	Grease Pan Sm Handle BSP	1
7	101685	GREASE PAN HANDLE 24	1

GUARANTEEDPARTS.COM
CUSTOMER SATISFACTION GUARANTEED

Front 18K 22K Burner Assembly

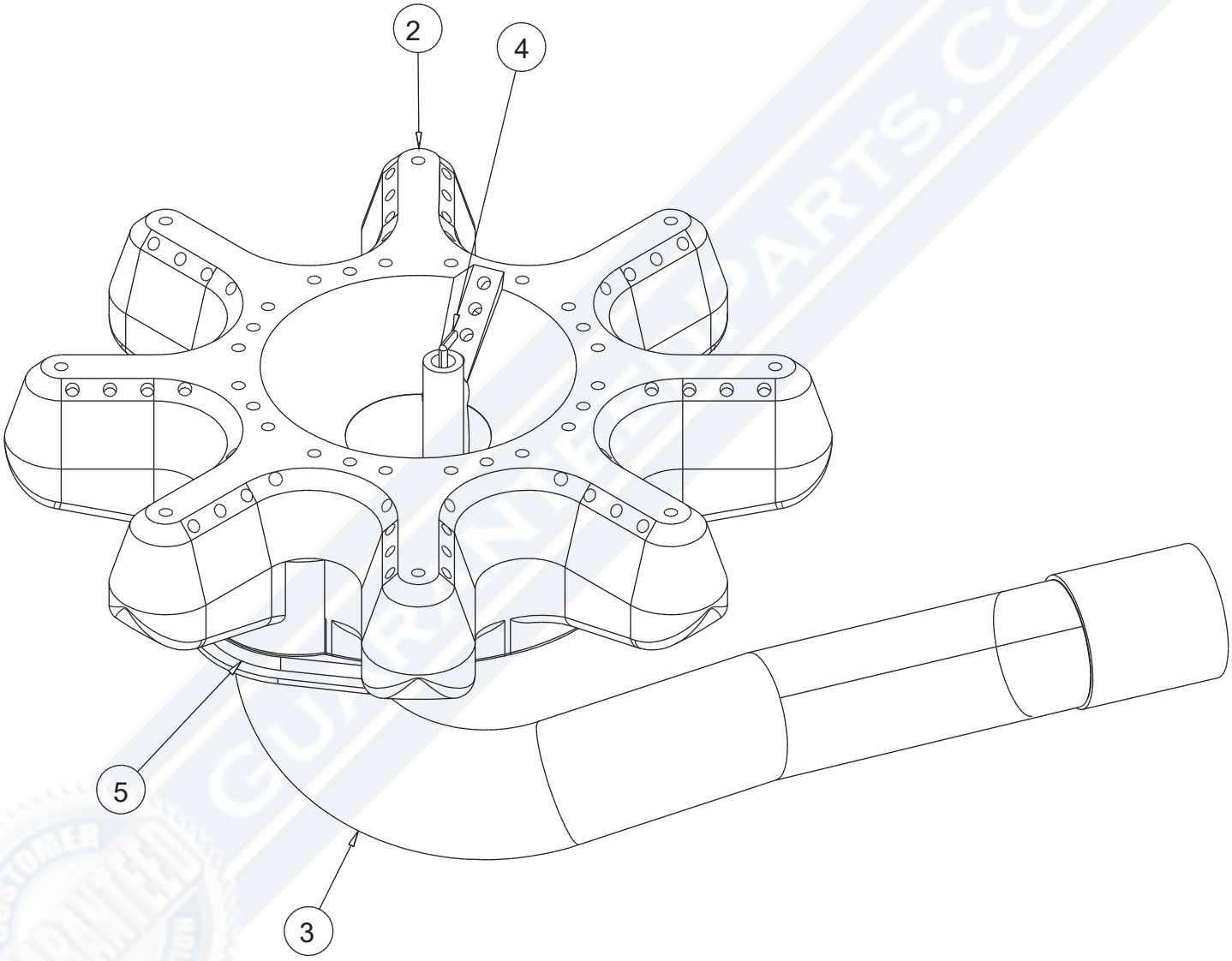

Front 18K 22K Burner Assembly

Reference Number	Part Number	Part Name	Quantity
1	304202	SCREW 10-24 x 3/8 PH TRUSS SS	2
2	729801	18K/22K 8 FINGER STAR BURNER	1
3	733801	0029006B01 1" OD FRONT MIXER T	1
4	741801	ELECTRODE SIM/15K/18K/22K	1
5	734301	GASKET FOR VENTURI	1

GUARANTEEDPARTS.COM
GUARANTEED CUSTOMER SATISFACTION

Front 25K Burner Assembly

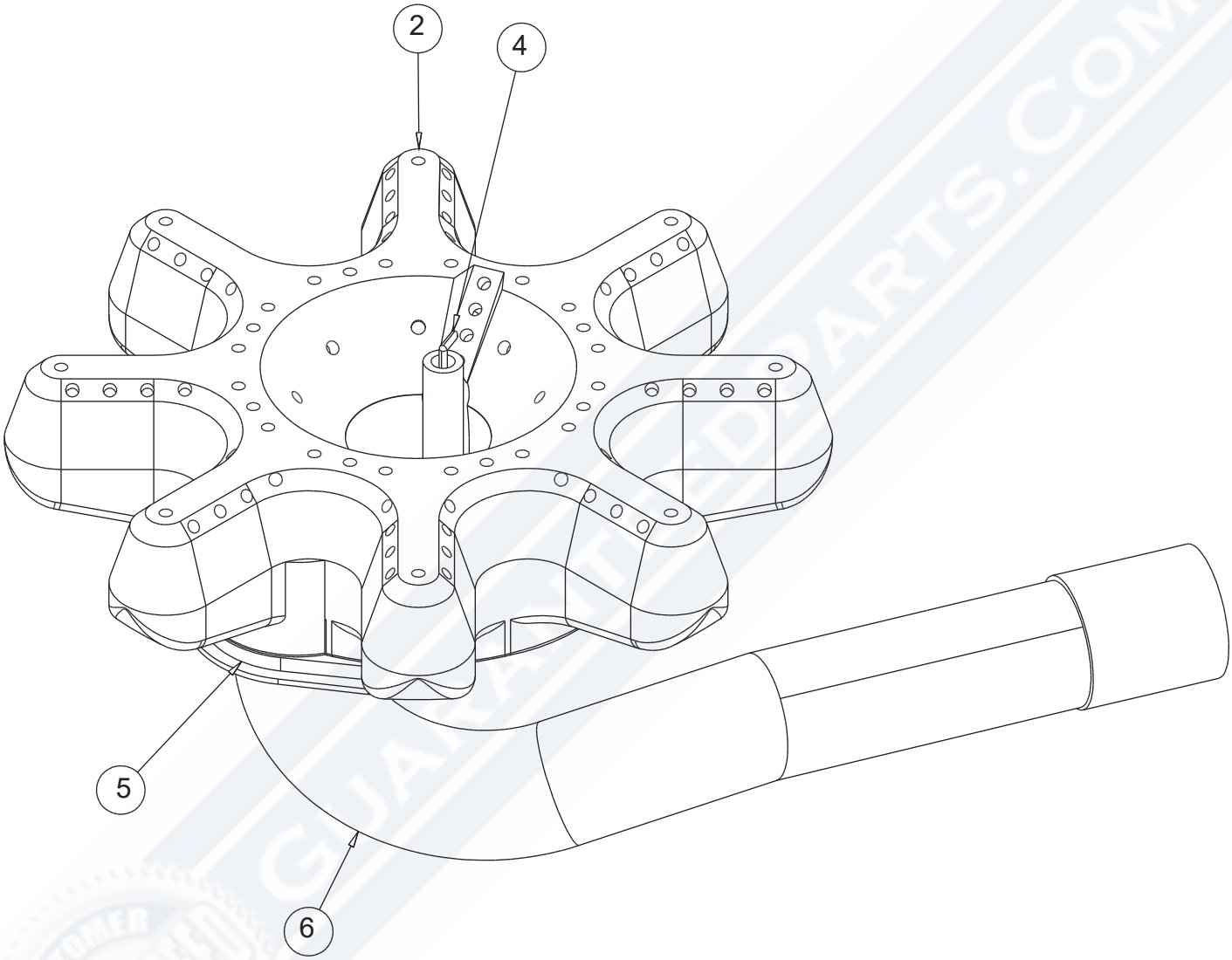

Front 25K Burner Assembly

Reference Number	Part Number	Part Name	Quantity
1	304202	SCREW 10-24 x 3/8 PH TRUSS SS	2
2	729804	25K STAR BURNER	1
3	733801	0029006B01 1" OD FRONT MIXER T	1
4	741801	ELECTRODE SIM/15K/18K/22K	1
5	734301	GASKET FOR VENTURI	1

GUARANTEEDPARTS.COM
CUSTOMER SATISFACTION GUARANTEED

Rear 18K 22K Burner Assembly

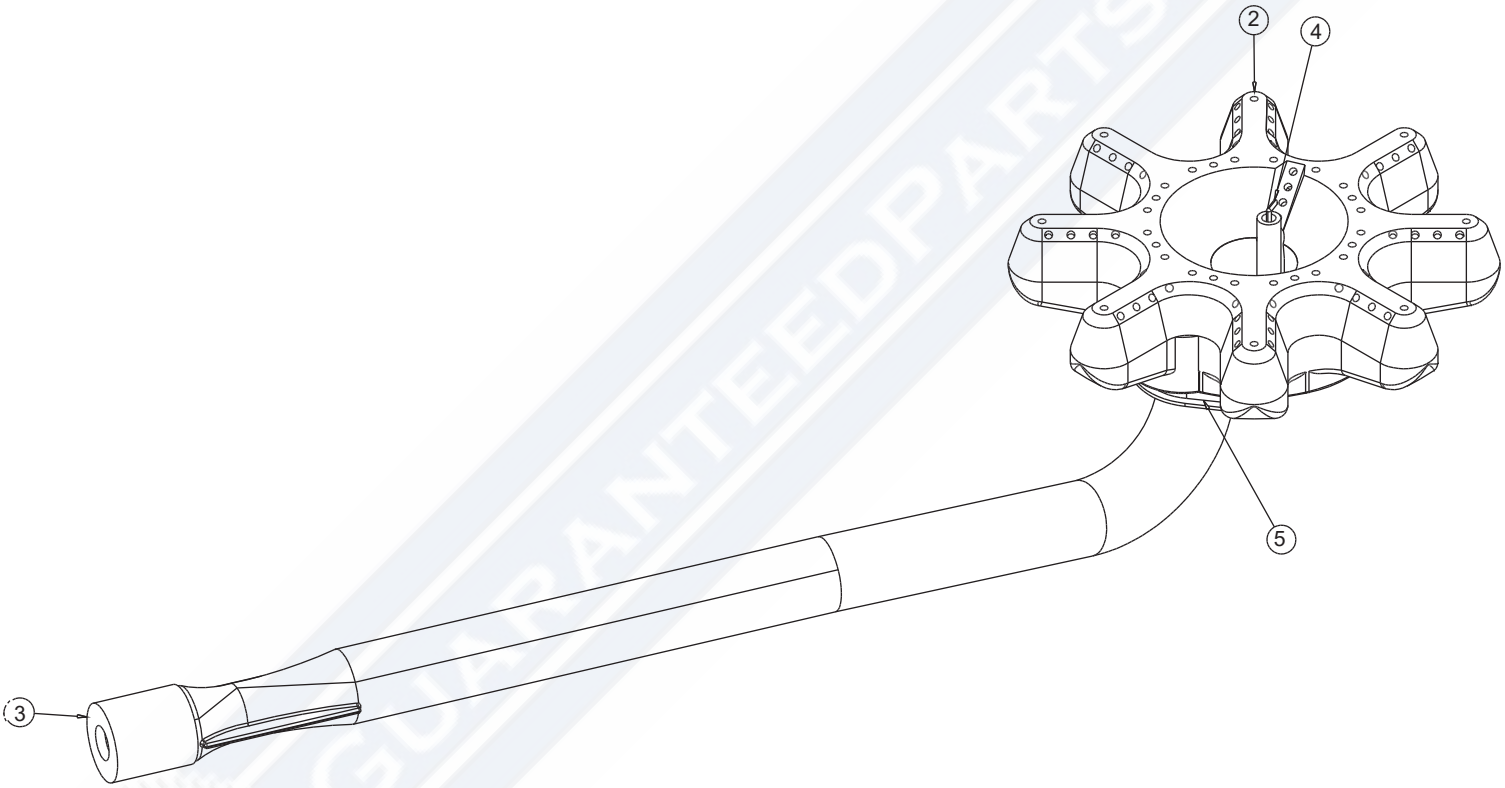

GUARANTEEDPARTS.COM

Rear 18K 22K Burner Assembly

Reference Number	Part Number	Part Name	Quantity
1	304202	SCREW 10-24 x 3/8 PH TRUSS SS	2
2	729801	18K/22K 8 FINGER STAR BURNER	1
3	733802	0029007B01, 1" OD REAR MIXER	1
4	741801	ELECTRODE SIM/15K/18K/22K	1
5	734301	GASKET FOR VENTURI	1

GUARANTEEDPARTS.COM
CUSTOMER SATISFACTION GUARANTEED

Rear Simmer Burner Assembly

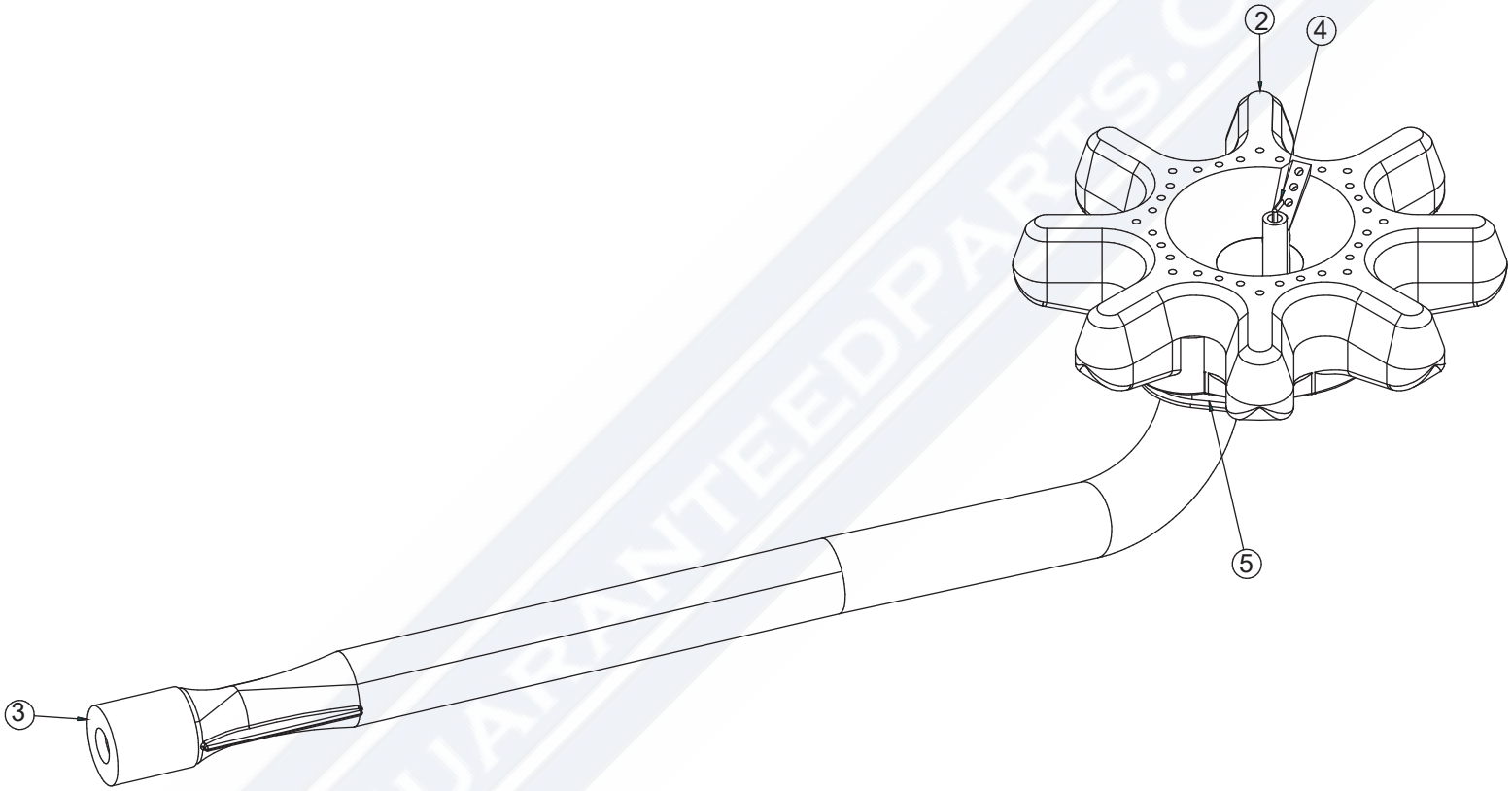

GUARANTEEDPARTS.COM

Rear Simmer Burner Assembly

Reference Number	Part Number	Part Name	Quantity
1	304202	SCREW 10-24 x 3/8 PH TRUSS SS	2
2	729803	9.5 K STAR BURNER / SIMMER	1
3	733802	0029007B01, 1" OD REAR MIXER	1
4	741801	ELECTRODE SIM/15K/18K/22K	1
5	734301	GASKET FOR VENTURI	1

GUARANTEEDPARTS.COM
CUSTOMER SATISFACTION GUARANTEED

Orifice Chart

Part Number	Descrpition	Fuel Type	Burner Type	Sea Level	2000 ^	3000^	4000^	5000^	6000^	7000^	8000^	9000^	10000^
709512	Orifice Hood 1.25mm	Nat	Surface Simmer	1.25									
709570	Orifice Hood #70	LP	Surface Simmer	70	70	71	71	71	71	72	72	72	72
709547	Orifice Hood #47	Nat	Surface 22k BTU	47	48	48	49	49	49	50	50	51	51
709555	Orifice Hood #55	LP	Surface 22k BTU	55	55	55	55	56	56	56	56	56	57
709551	Orifice Hood #51	Nat	Surface 15k BTU	51	51	52	52	52	52	53	53	53	54
709559	Orifice Hood #59	LP	Surface 15k BTU	59	60	61	61	62	62	63	64	64	65
709548	Orifice Hood #48	Nat	Surface 18k BTU	48	49	49	49	50	50	50	51	51	52
709512	Orifice Hood 1.25mm	LP	Surface 18k BTU	1.25									
709543	Orifice Hood #43	Nat	Surface Platinum 25k BTU	43	44	44	44	45	45	46	47	47	48
709555	Orifice Hood #55	LP	Surface Platinum 25k BTU	55	55	55	55	56	56	56	56	56	57
735550	IR burner elbow & orifice #50	Nat	IR Broiler	50	51	51	51	51	52	52	52	53	53
735556	IR burner elbow & orifice #56	LP	IR Broiler	56	56	56	57	57	57	58	59	59	60
718742	Oven burner orifice #42	Nat	Bake Burner	42	42	43	43	43	44	44	45	46	47
718752	Oven burner orifice #53	LP	Bake Burner	53	54	54	54	54	54	54	55	55	55
781010	Power Burner Orifice BLANK	S.O.	Power Burner Platinum - Order to gas size, Nat - .096 / LP - .056										
		Nat	Griddle										
		LP	Griddle										
		Nat	Char Grill										
		LP	Char Grill										
		Nat	French Top										
		LP	French Top										
		Nat	Salamander										
		LP	Salamander										